DVD Micro System

MCD750/93

Service
Service
Service

Service Manual

TABLE OF CONTENTS

Location of PC Boards 1-1
Specification 1-2
Measurement Setup 1-3
Service Aids 1-4
Instruction On CD Playability .....1-5 to 1-6
Software Version Check & Upgrade 2-1
Malfuction Check Chart 2-2
Disassembly Diagram 3-1
Block Diagram 4-1
Wiring Diagram..... 4-2
VFD Display Board 5
Circuit diagram 5-1
Layout diagram 5-2
USB & AUX Board 6-1
TUNER Board 7
Circuit diagram 7-1
Layout diagram 7-2
Decoder Board 8
Circuit diagram ..... 8-1 to 8-6
Layout diagram .....8-7 to 8-8
Explode View 9-1
Service Partlist 10-1

CLASS 1
LASER PRODUCT

© Copyright 2008 Philips Consumer Electronics B.V. Eindhoven, The Netherlands
All rights reserved. No part of this publication may be reproduced, stored in a retrieval system or transmitted, in any form or by any means, electronic, mechanical, photocopying, or otherwise without the prior permission of Philips.

Published by DB 0822 Service Audio Printed in The Netherlands Subject to modification © 3141 785 32941

Version 1.0

PHILIPS

Location of PC Boards

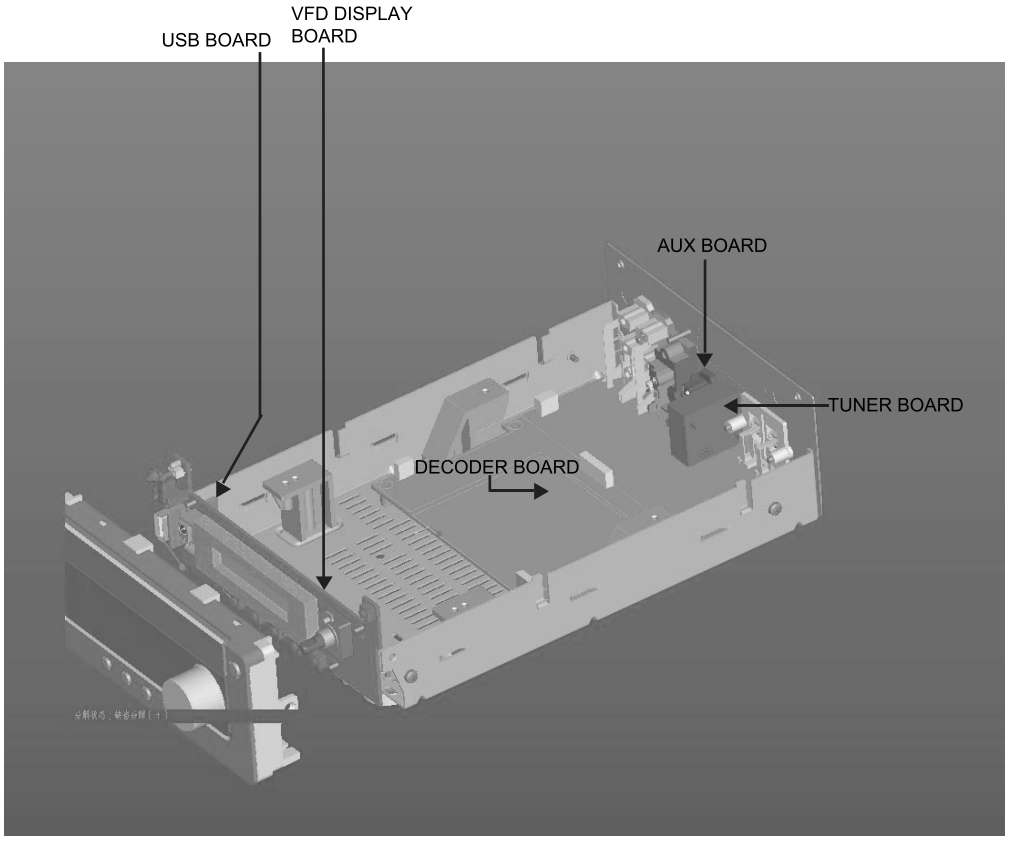

VERSION VARIATIONS :

Type /Versions: / Service policy / Board in used:	MCD750										
	/05	/12	/37	/55	/58	/61	/79	/93	/94	/96	/98
DISPLAY BOARD								M			
USB BOARD								M			
AXU BOARD								M			
TUNER BOARD								M			
DECODER BOARD								M			

Type /Versions: / Features / Feature diffrence	MCD750										
	/05	/12	/37	/55	/58	/61	/79	/93	/94	/96	/98
RDS											
VOLTAGE SELECTOR											
ECO STANDBY - DARK											
TDS											

* TIPS : C -- Component Lever Repair.
M -- Module Lever Repair
√ -- Used

Specification

AMPLIFIER

Rated Output Power ....2 x 25W RMS
Signal-to-noise ratio ..... ≥ 65 dBA
Frequency response ..... 50Hz - 3 dB+/-2 20KHz
Aux Input .....0.5V RMS 47kohm

DISC

Laser Type ..... Semiconductor
Disc Diameter 12cm/8cm
Support Disc .....
DVD,DVD-R,DVD-RW,DVD+RW,CD-DA,MP3,CD-RW
Audio DAC .....24Bits / 44.1kHz
Total Harmonic Distortion ..... <0.1%(1kHz)
Frequency Response ..... 50Hz - 3dB+/-2 20KHz
S/N Ration .....≥65dBA

TUNER

FM Tuning Range ..... 87.5 – 108 MHz
Tuning grid 50KHz

Sensitivity

– Mono, 50dB S/N Ratio ..... 5u V
– Stereo, 46dB S/N Ratio 100uV
Selectivity .....>28dB
Image Rejection .....>25dB
Total Harmonic Distortion ..... <3%
Signal to Noise Ration .....>65dBA

SPEAKERS

Speaker Impedance 8ohm
Speaker Driver, base .....4"
Speaker Driver, tweeter .....BUZZER
Frequency Response .....50Hz -3dB+/-2 20KHz

GENERAL INFORMATION

Total Output power ..... 60W RMS
AC Power .....220-230V / 50Hz/60Hz
Operation Power Consumption 25W
Standby Power Consumption .....<4W
Eco Standby Power Consumption .....<1W
Headphone Output 2X15mW 32ohm
USB Direct ..... Version 1.1

Dimensions

– Main unit (w x h x d) 158.7x66.5x250.2mm
– Speaker box (w x h x d) 115x152x204mm

Weight

– With Packing .....7.5 KG
– Main Unit 1.2KG
– Speaker box 2.7KG
Net Weight..... . 6.5KG

Specifications and external appearance are subject to change without notice.

MEASUREMENT SETUP

Tuner FM

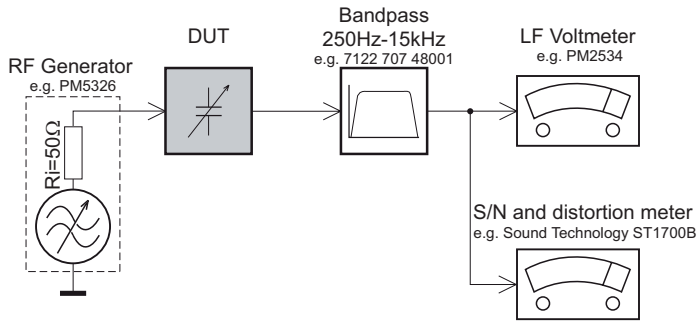

Use a bandpass filter to eliminate hum (50Hz, 100Hz) and disturbance from the pilottone (19kHz, 38kHz).

Tuner AM (MW,LW)

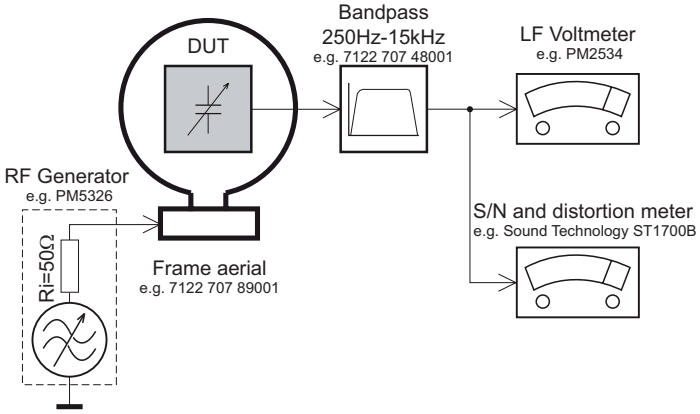

To avoid atmospheric interference all AM-measurements have to be carried out in a Faraday´s cage.
Use a bandpass filter (or at least a high pass filter with 250Hz) to eliminate hum (50Hz, 100Hz).

CD

Use Audio Signal Disc SBC429 4822 397 30184
(replaces test disc 3)

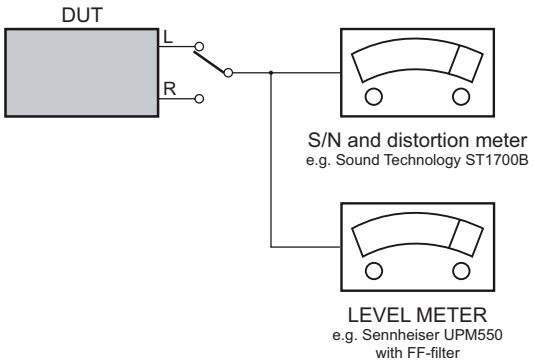

Recorder

Use Universal Test Cassette **CrO2** SBC419 4822 397 30069
or Universal Test Cassette **Fe** SBC420 4822 397 30071

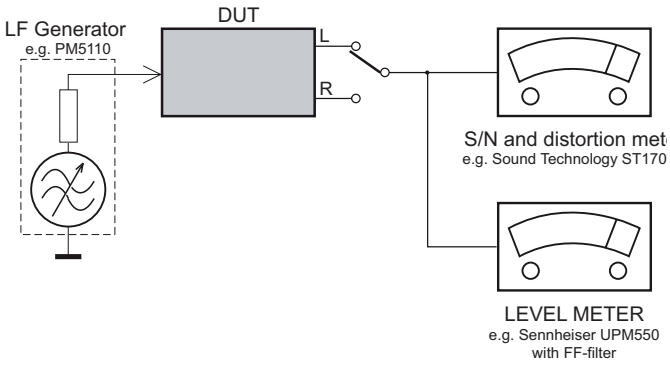

SERVICE AIDS

GB WARNING

All ICs and many other semi-conductors are susceptible to electrostatic discharges (ESD). Careless handling during repair can reduce life drastically.
When repairing, make sure that you are connected with the same potential as the mass of the set via a wrist wrap with resistance.
Keep components and tools also at this potential.

ESD

GB

Safety regulations require that the set be restored to its original condition and that parts which are identical with those specified, be used

Safety components are marked by the symbol ⚠.

INFORMATION ABOUT LEAD-FREE SOLDERING

Philips CE is producing lead-free sets from 1.1.2005 onwards.
IDENTIFICATION:

Regardless of special logo (not always indicated) one must treat all sets from 1 Jan 2005 onwards, according next rules:

- On our website **www.atyourservice.ce.Philips.com** you find more information to:
  - BGA-de-/soldering (+ baking instructions)
  - Heating-profiles of BGAs and other ICs used in Philips-sets
  - Lead free

  You will find this and more technical information within the "magazine", chapter "workshop news".

For additional questions please contact your local repair-helpdesk.

SERVICE INSTRUCTION

Safety regulations require that after a repair, the set must be returned in its original condition. Pay in particular attention to the following points:

- Route the wire trees correctly and fix them with the mounted cable clamps.
- Check the insulation of the AC Power lead for external damage.
- Check the strain relief of the AC Power cord for proper function.
- Check the electrical DC resistance between the AC Power Plug and the secondary side (only for sets which have a AC Power isolated power supply):

1. Unplug the AC Power cord and connect a wire between the two pins of the AC Power plug.
2. Set the AC Power switch to the "on" position (keep the AC Power cord unplugged!).
3. Measure the resistance value between the pins of the AC Power plug and the metal shielding of the tuner or the aerial connection on the set. The reading should be larger than 4.5 Mohm (For U.S. it should be between 4.2 Mohm and 12 Mohm).
4. Switch "off" the set, and remove the wire between the two pins of the AC Power plug.

- Check the cabinet for defects, to avoid touching of any inner parts by the customer.

INSTRUCTIONS ON CD PLAYABILITY

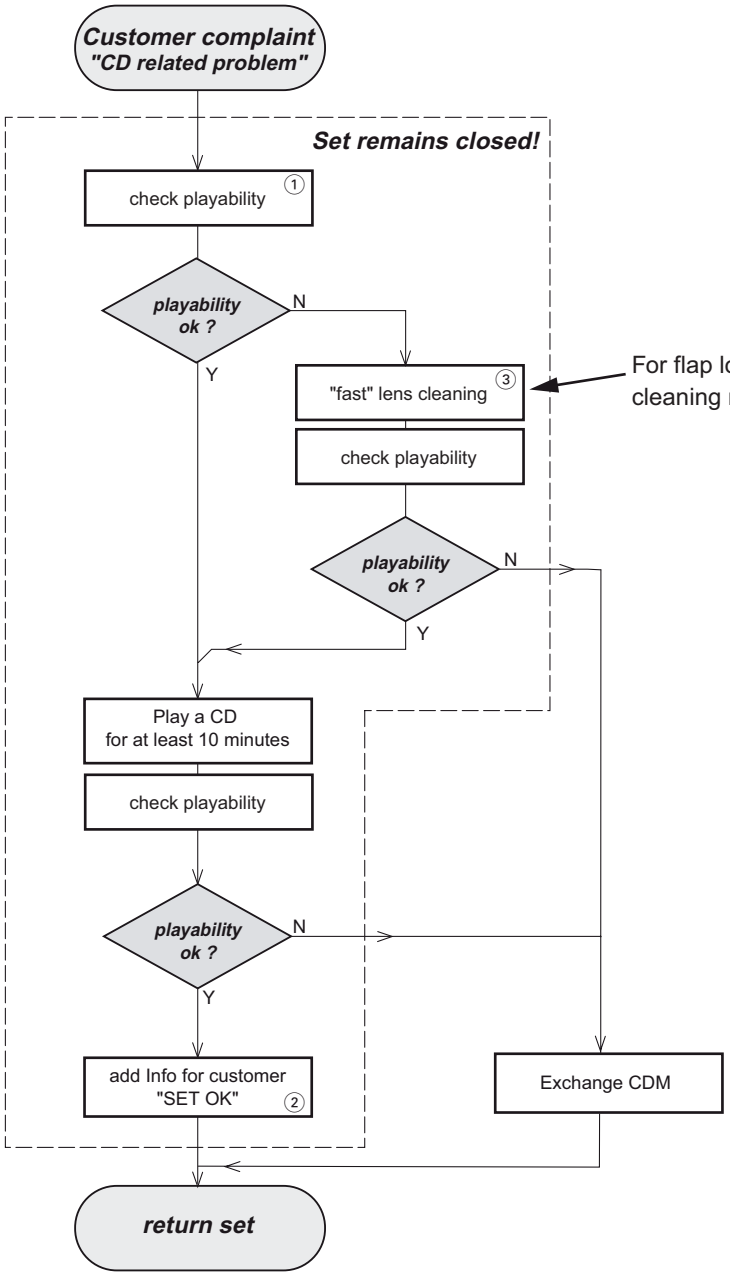

For flap loaders (= access to CD drive possible) cleaning method ④ is recommended

① - ④ For description - see following pages

INSTRUCTIONS ON CD PLAYABILITY

①

PLAYABILITY CHECK

For sets which are compatible with **CD-RW** discs
use CD-RW Printed Audio Disc.....7104 099 96611
TR 3 (Fingerprint)
TR 8 (600µ Black dot) **maximum at 01:00**

- playback of these two tracks without audible disturbance
  playing time for: Fingerprint ≥10seconds
  Black dot from 00:50 to 01:10
- jump forward/backward (search) within a reasonable time

For all other sets
use CD-DA SBC 444A.....4822 397 30245
TR 14 (600µ Black dot) **maximum at 01:15**
TR 19 (Fingerprint)
TR 10 (1000µ wedge)

- playback of all these tracks without audible disturbance
  playing time for: 1000µ wedge ≥10seconds
  Fingerprint ≥10seconds
  Black dot from 01:05 to 01:25
- jump forward/backward (search) within a reasonable time

②

CUSTOMER INFORMATION

It is proposed to add an addendum sheet to the set which informs the customer that the set has been checked carefully - but no fault was found.
The problem was obviously caused by a scratched, dirty or copy-protected CD. In case problems remain, the customer is requested to contact the workshop directly.
The lens cleaning (method ③) should be mentioned in the addendum sheet.

The final wording in national language as well as the printing is under responsibility of the Regional Service Organizations.

④

LIQUID LENS CLEANING

Before touching the lens it is advised to clean the surface of the lens by blowing clean air over it. This to avoid that little particles make scratches on the lens.

Because the material of the lens is synthetic and coated with a special anti-reflectivity layer, cleaning must be done with a non-aggressive cleaning fluid. It is advised to use “Cleaning Solvent

The actuator is a very precise mechanical component and may not be damaged in order to guarantee its full function. Clean the lens gently (don’t press too hard) with a soft and clean cotton bud moistened with the special lens cleaner.

The direction of cleaning must be in the way as indicated in the picture below.

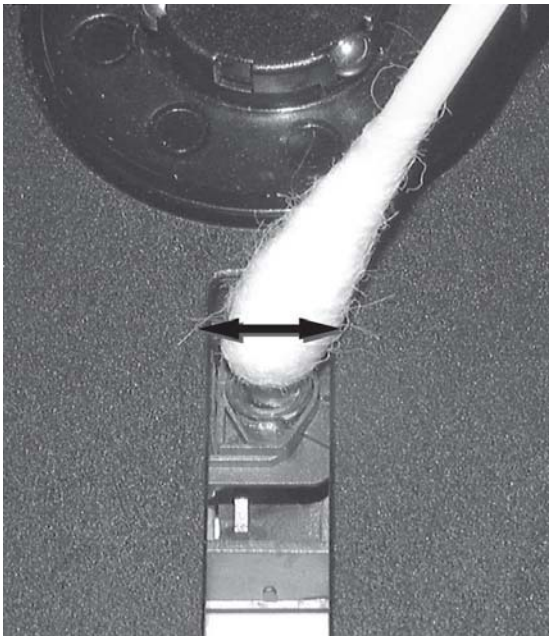

Software Version Check & Upgrade

Upgrade software

1.Downloading the software form Philips support website
http://www.philips.com/support

2.Put in the Software CD Disc or USB,when it is loading,
the TV screen showing as below:

```
Upgrade File detected
Upgrade?
Press PLAY to start
Upgrading
```

Waiting half to one minute,till the TV screen showing disappear.
Turnoff electrical source and reopen.

3.Press SYSTEM on the remote open menu, press Left or Right to select “Preference Page”, TV screen showing as below:

```
--Preference Page--
TV type          PAL
Audio            CHI      English
Subtitle         CHI      French
Disc menu        CHI      Spanish
Parental                  Chinese
                          Japanese
Default                   Korean
                          Russian
                          Tjai
```

Press Up or Down to select “Default” on remote, Press OK to exit reset.
Software upgrade finish.

Software check

Input password “811502” on remote, TV screen showing as below:

```
Ver :    MCD750 / xxxx
Date     mm   dd   yyyy
Time     hh : mm : ss
Region code   x
```

CPU version check

1.Keep press PLAY/PAUSE and STOP buttons,plug into the power cord at one time,
TV showing as below:

```
MCD750  Vxx
```

Malfunction follow check chart

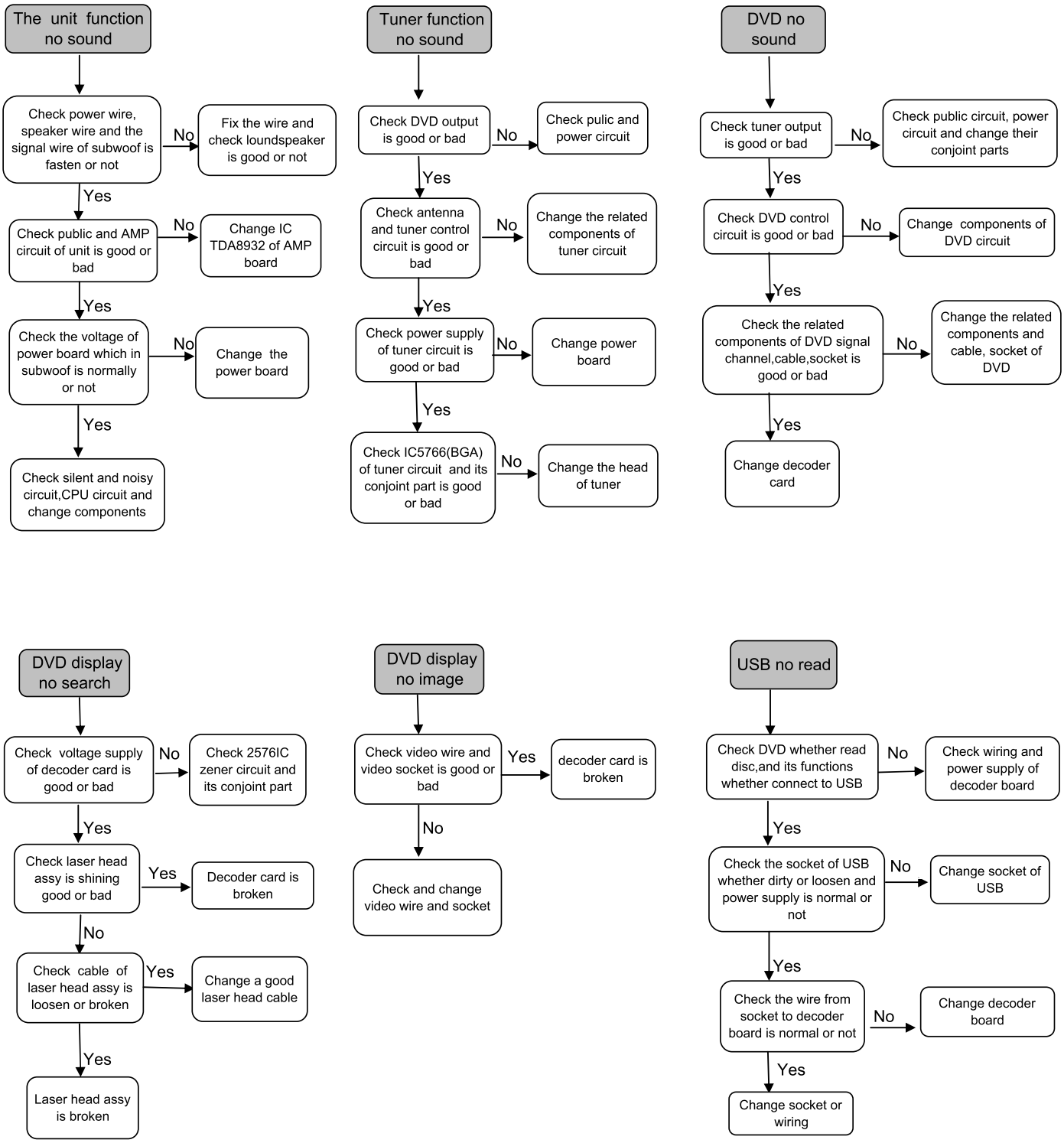

3-1

Disassembly Diagram

A. Power on, open DVD door. Power off, prize two place of lock of rubber feet , and then remove DVD door.

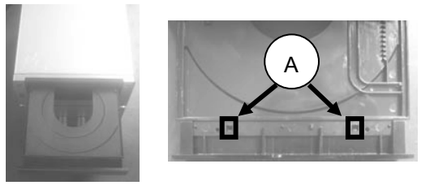

B. Loosen screws which located in the left of top cover TORX T-10 STTT 3.0X6.0NI(2PCS).

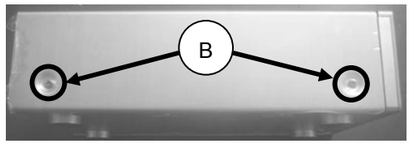

C. Loosen screws which located in the right of top cover TORX T-10 STTT 3.0X6.0NI(2PCS).

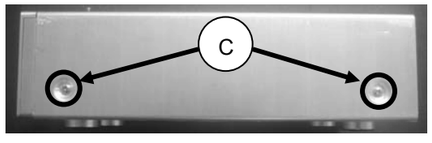

D. Loosen screws which located in the back of top cover TORX T-10 STTB 3.0X6.0 NI (2PCS), and remove top cover.

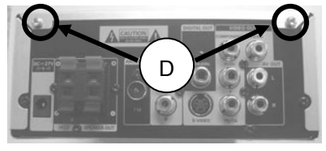

E. Loosen screws 3 X 10 PWA (4PCS) to remove DVD loader.

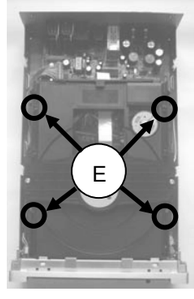

F. Loosen screws of cabinet 3 X 5 BMTT(2PCS).

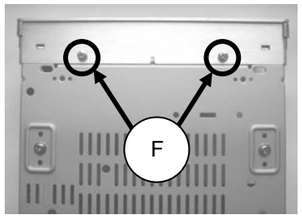

G. Loosen screws which located in the side of cabinet 3 X 5 FMTT(2PCS).

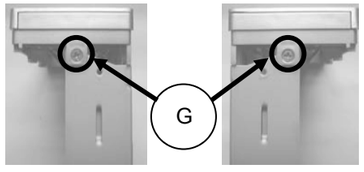

H. Loosen screws which located in the rear panel TORX STTP T-10 3.0X6.0 AB3(2PCS).

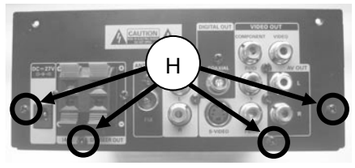

I. Loosen screws of terminal which located in the rear panel PHILIPS TORX T-10 1.5P 3.0X10.0 AB3(6PCS).

Loosen screw of tuner terminal TORX STTP T-10 3.0X6.0 AB3(1PCS).

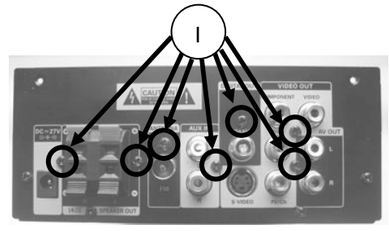

J. Loosen screws 3 X 5 BM(4PCS) to remove decoder card.

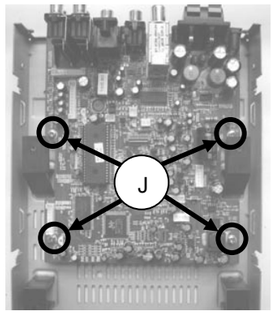

K. Loosen screws 2.6 X 8 PA(6PCS) to remove display board.

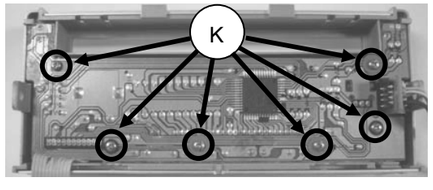

L. Remove the screw of volume(1PCS).

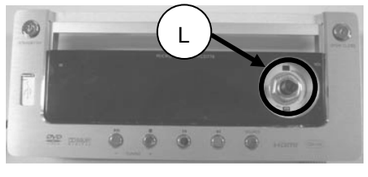

4-1

Block Diagram

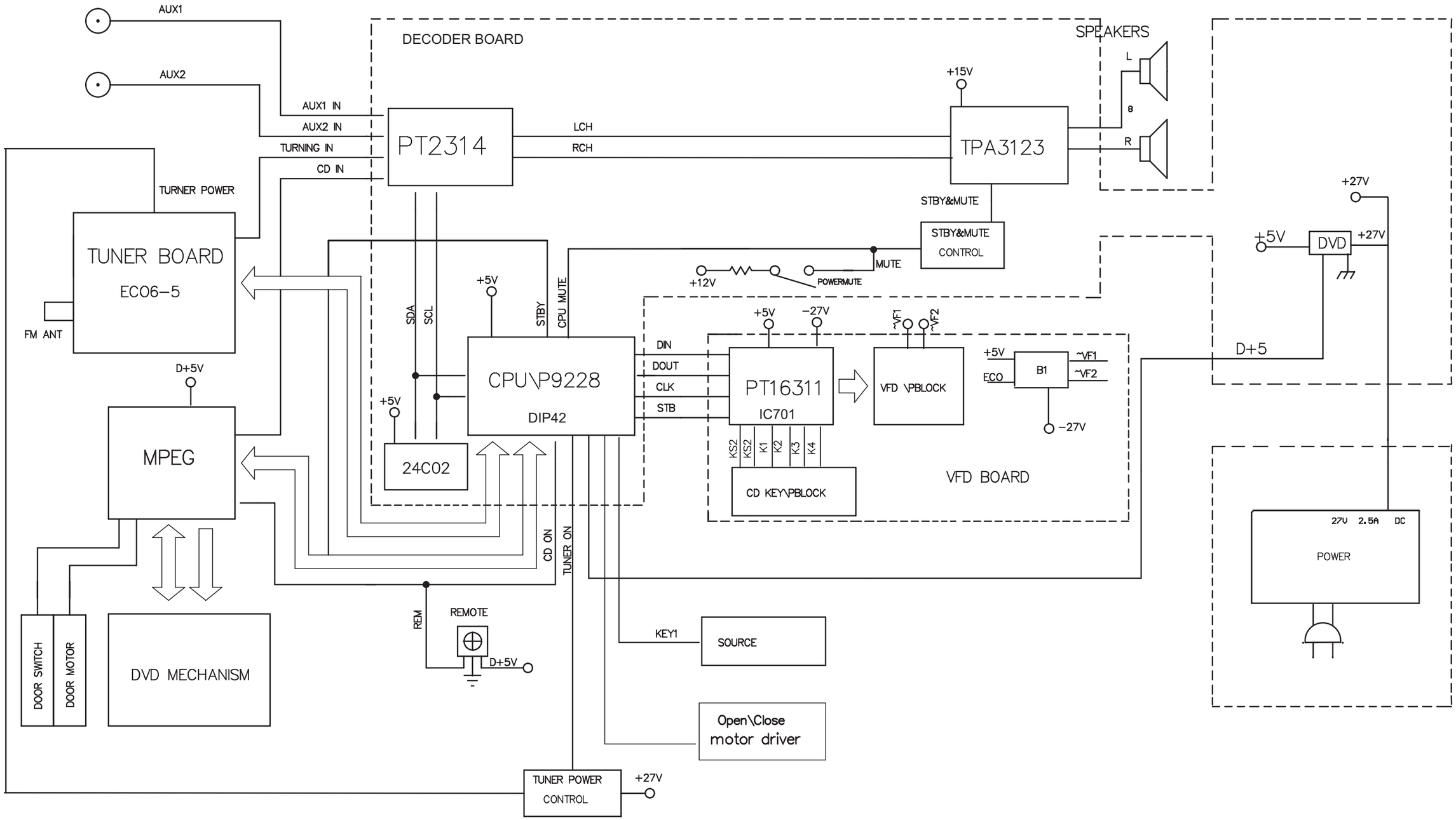

4-2

Wiring Diagram

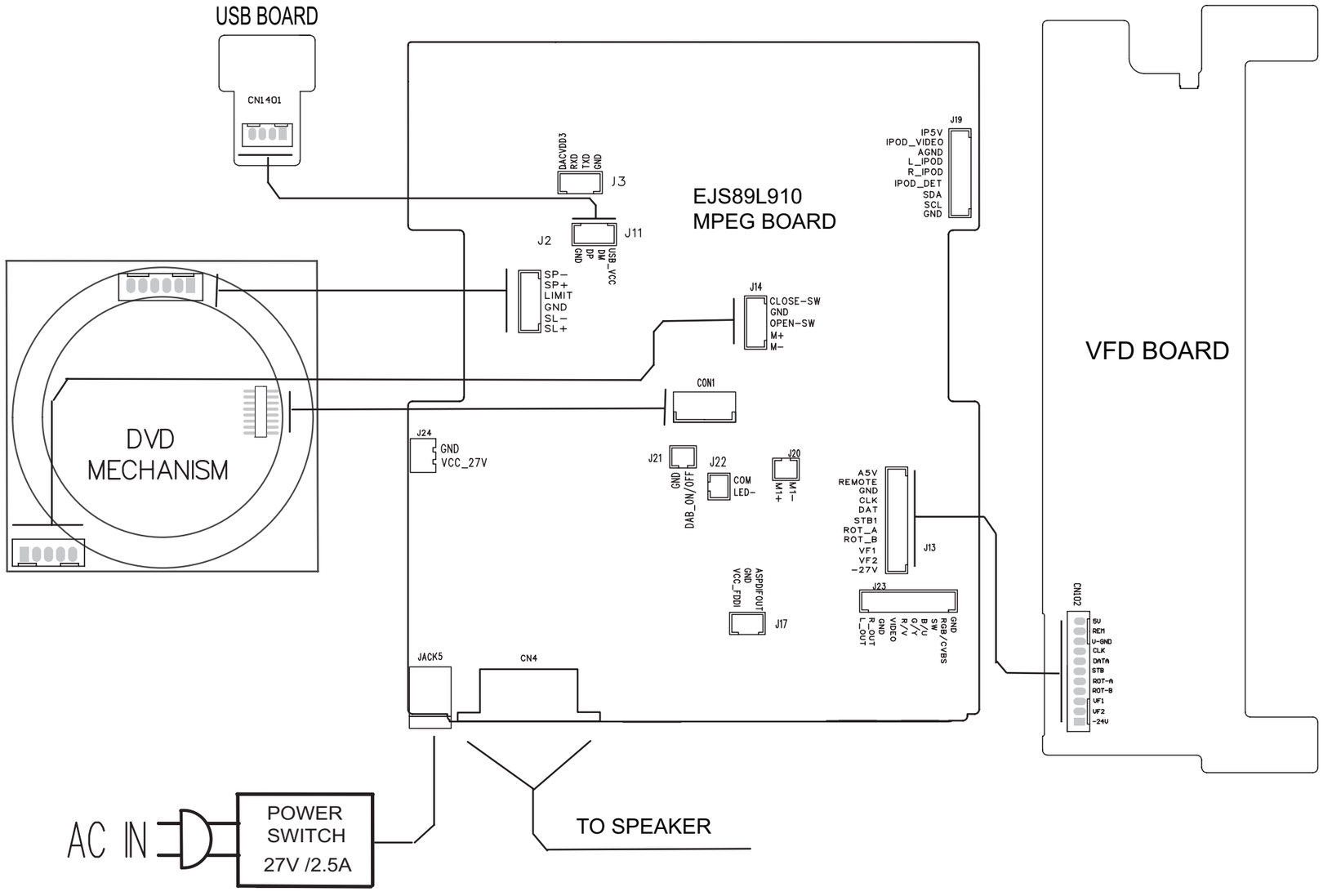

5-1

VFD Display Board--Circuit Diagram

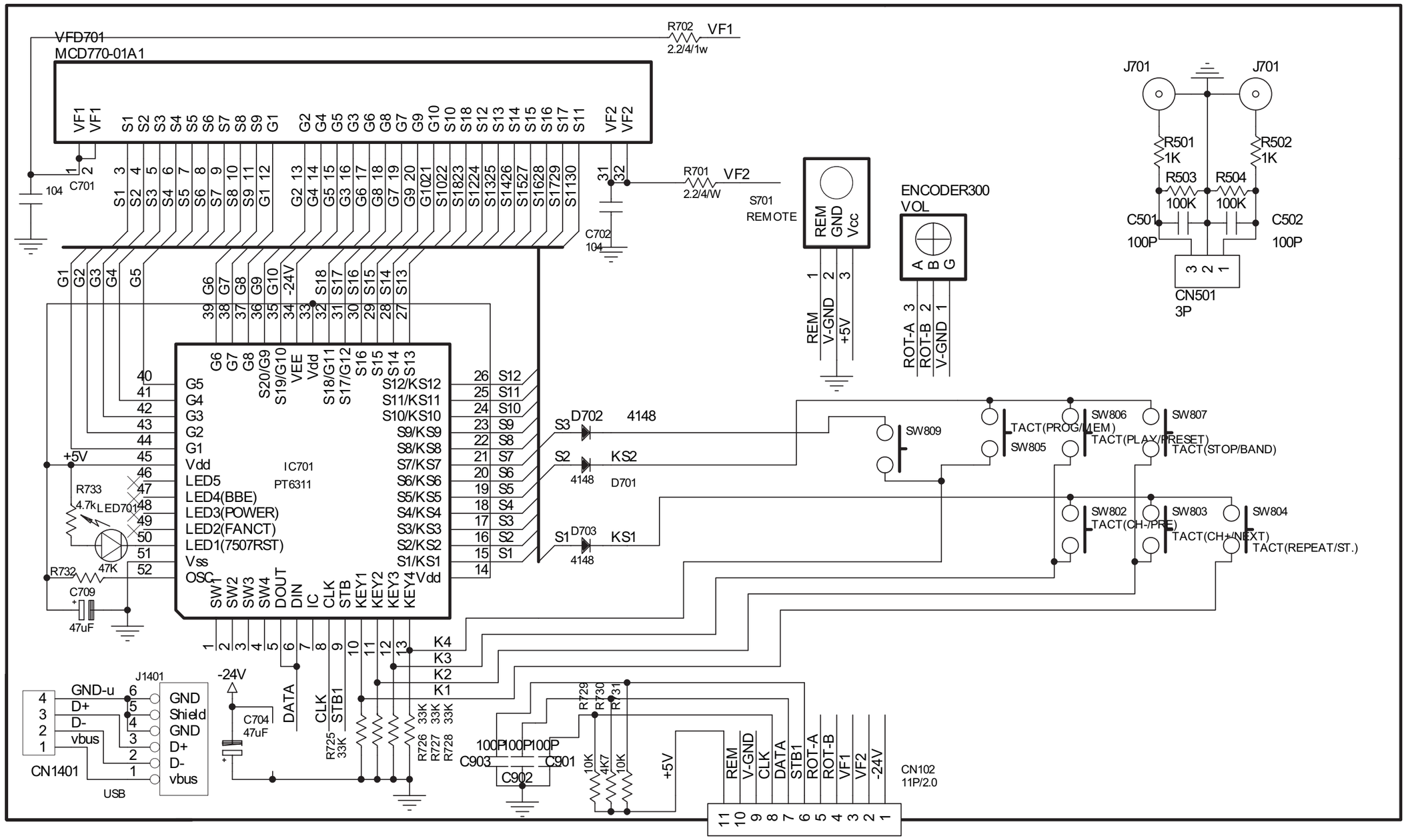

5-2

VFD Display Board--Layout Diagram

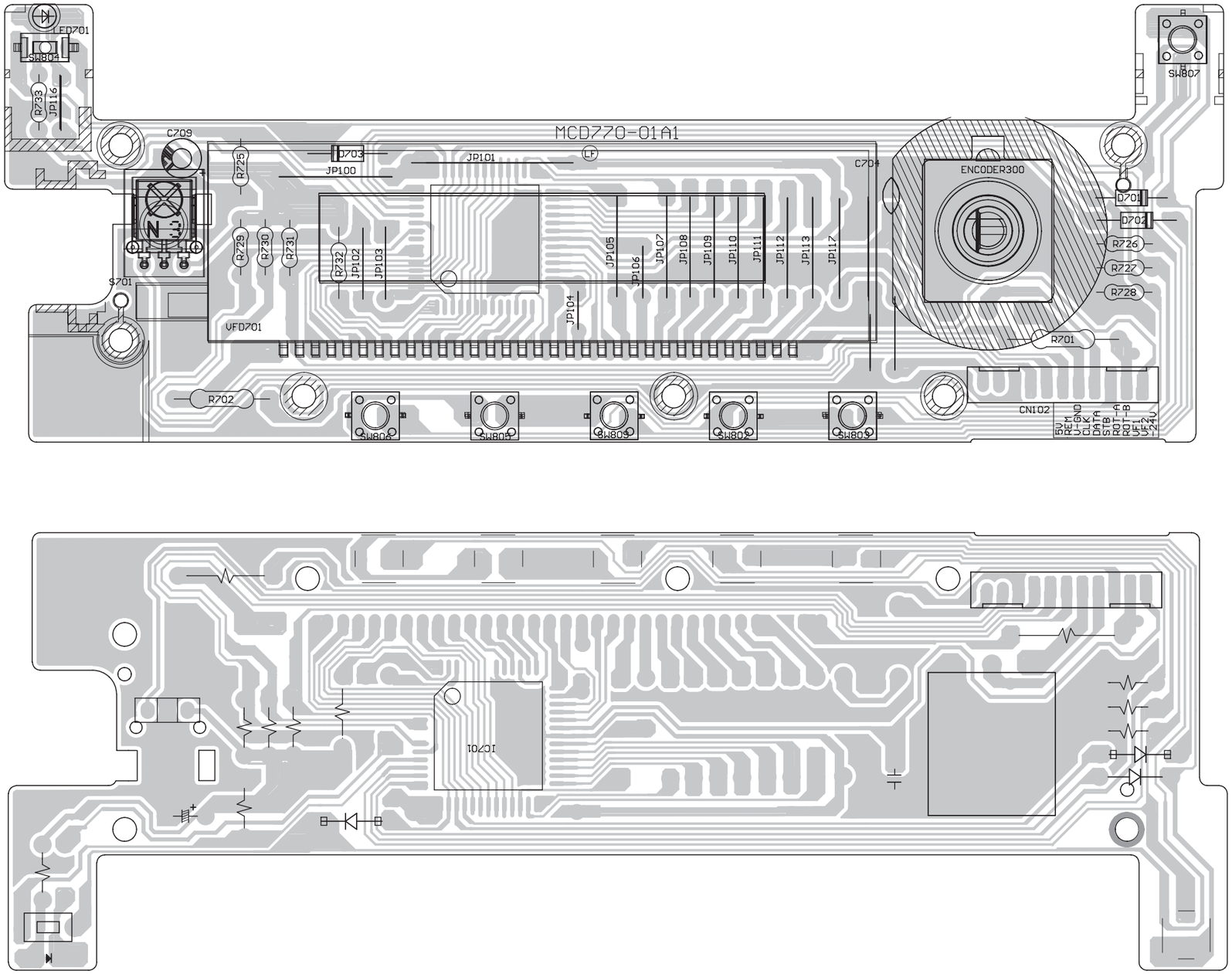

6-1

USB & AUX Board--Circuit & Layout diagram

AUX BOARD

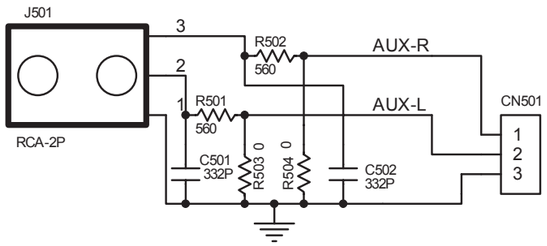

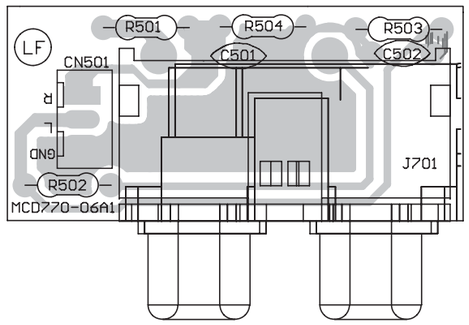

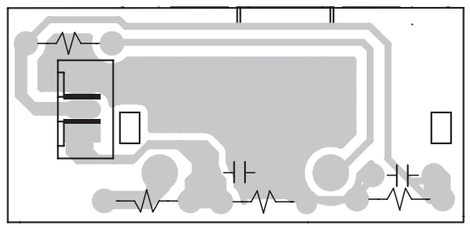

USB BOARD

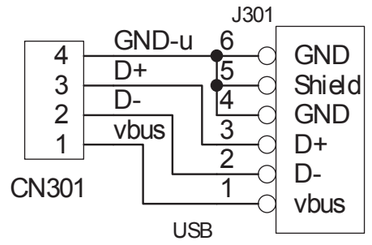

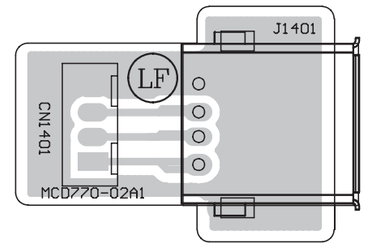

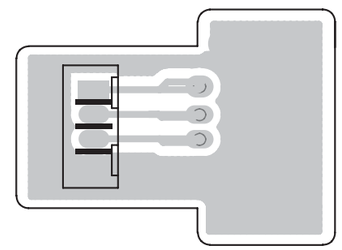

7 -1

Tuner Board-Circuit Diagram

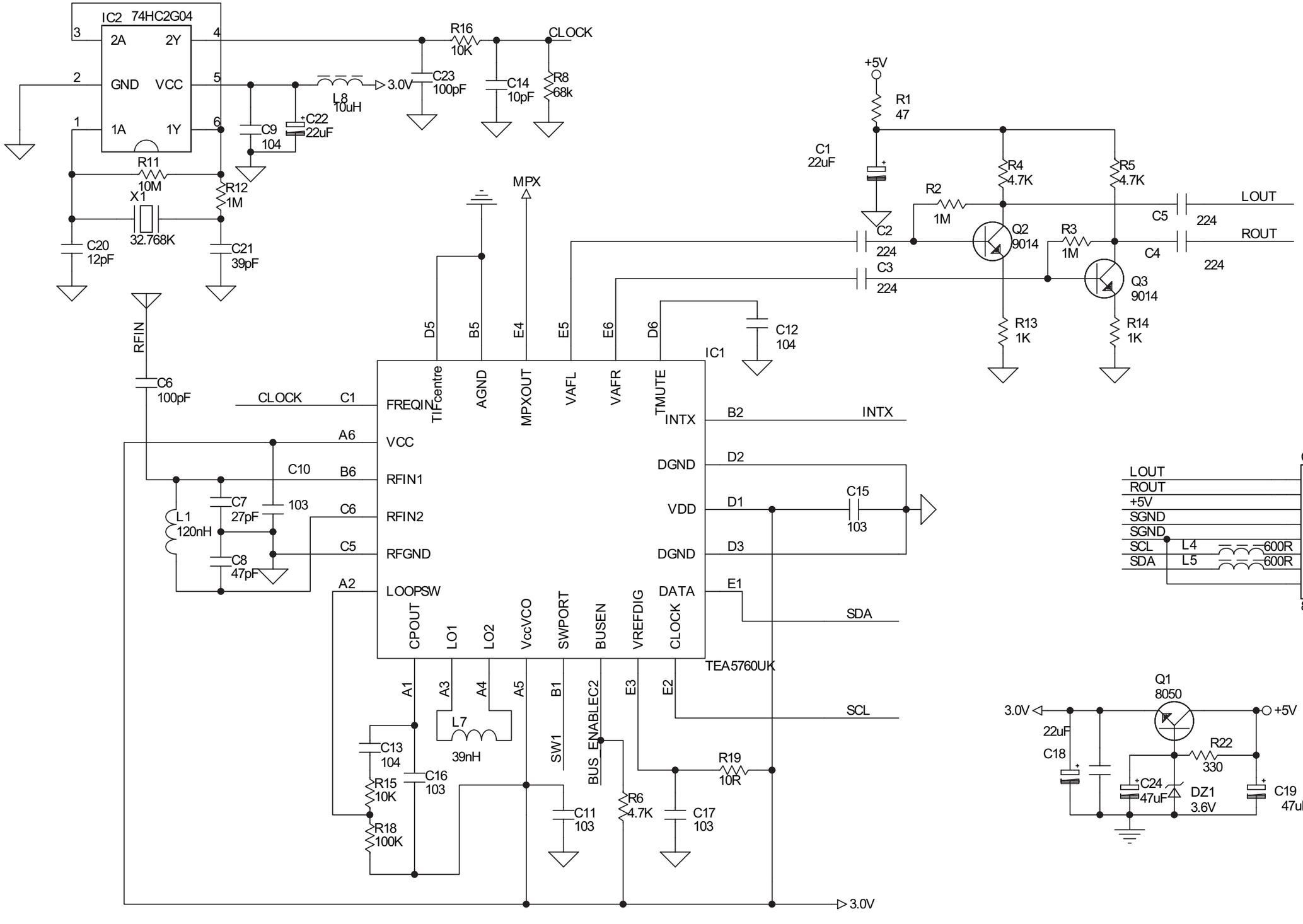

7-2

Tuner Board-Layout Diagram

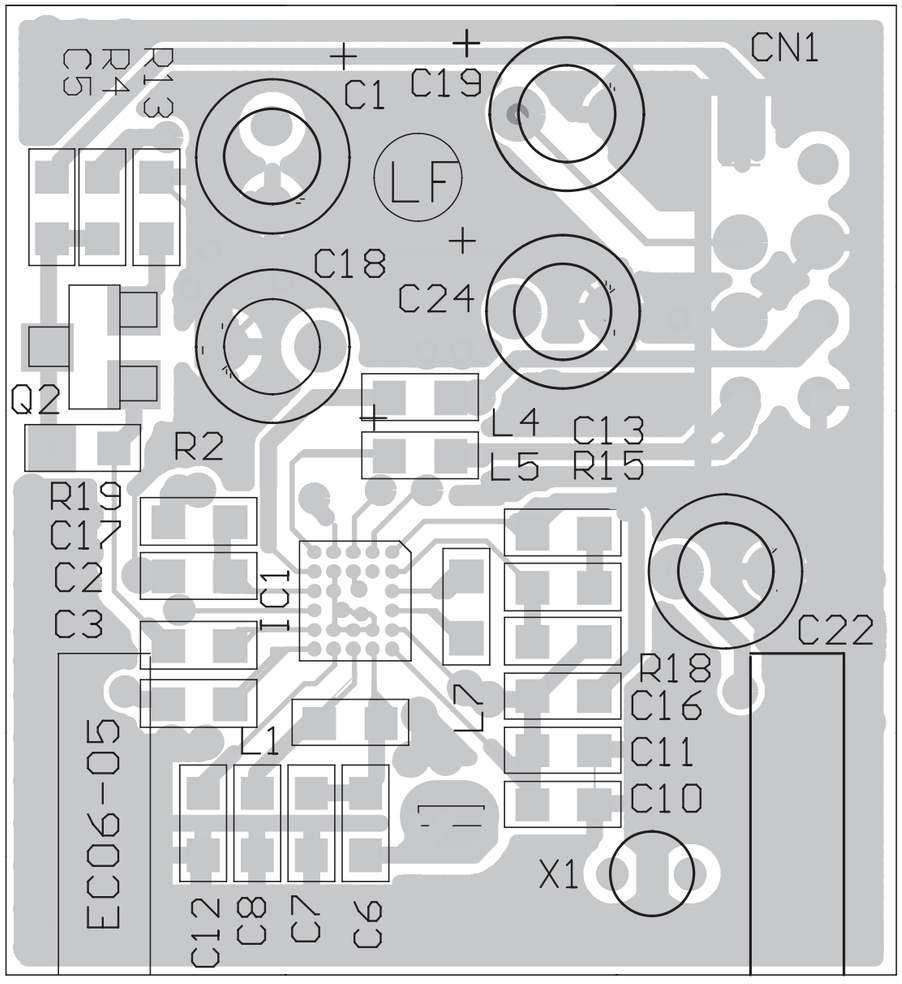

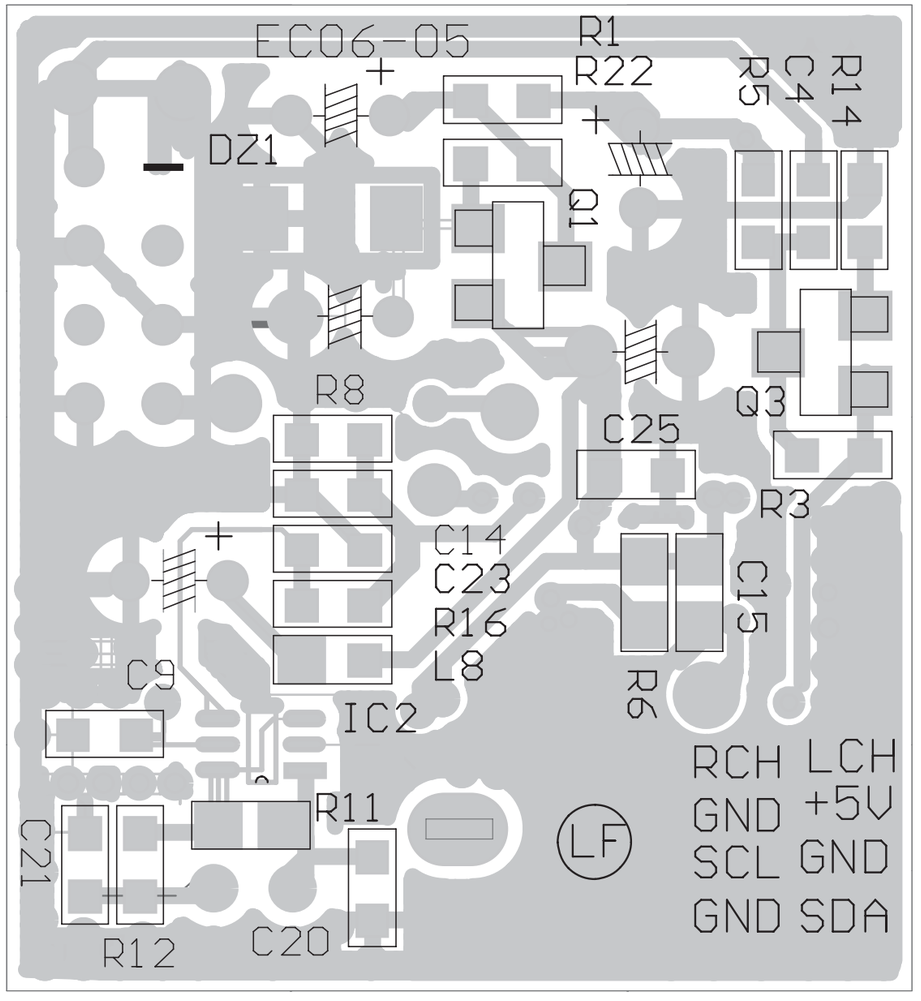

8-1

Decoder Board--Circuit Diagram-sheet1

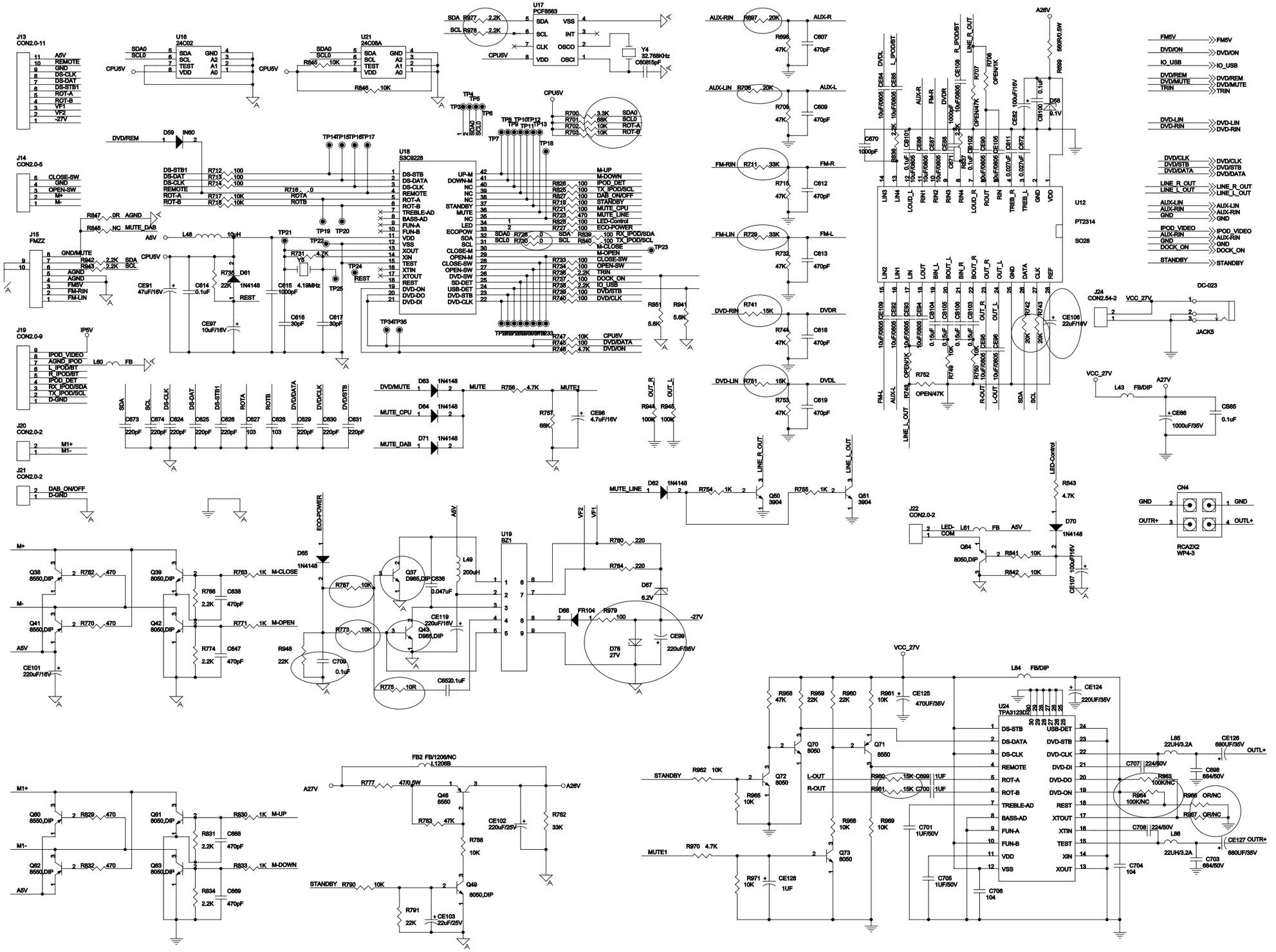

8-2

Decoder Board--Circuit Diagram-sheet2

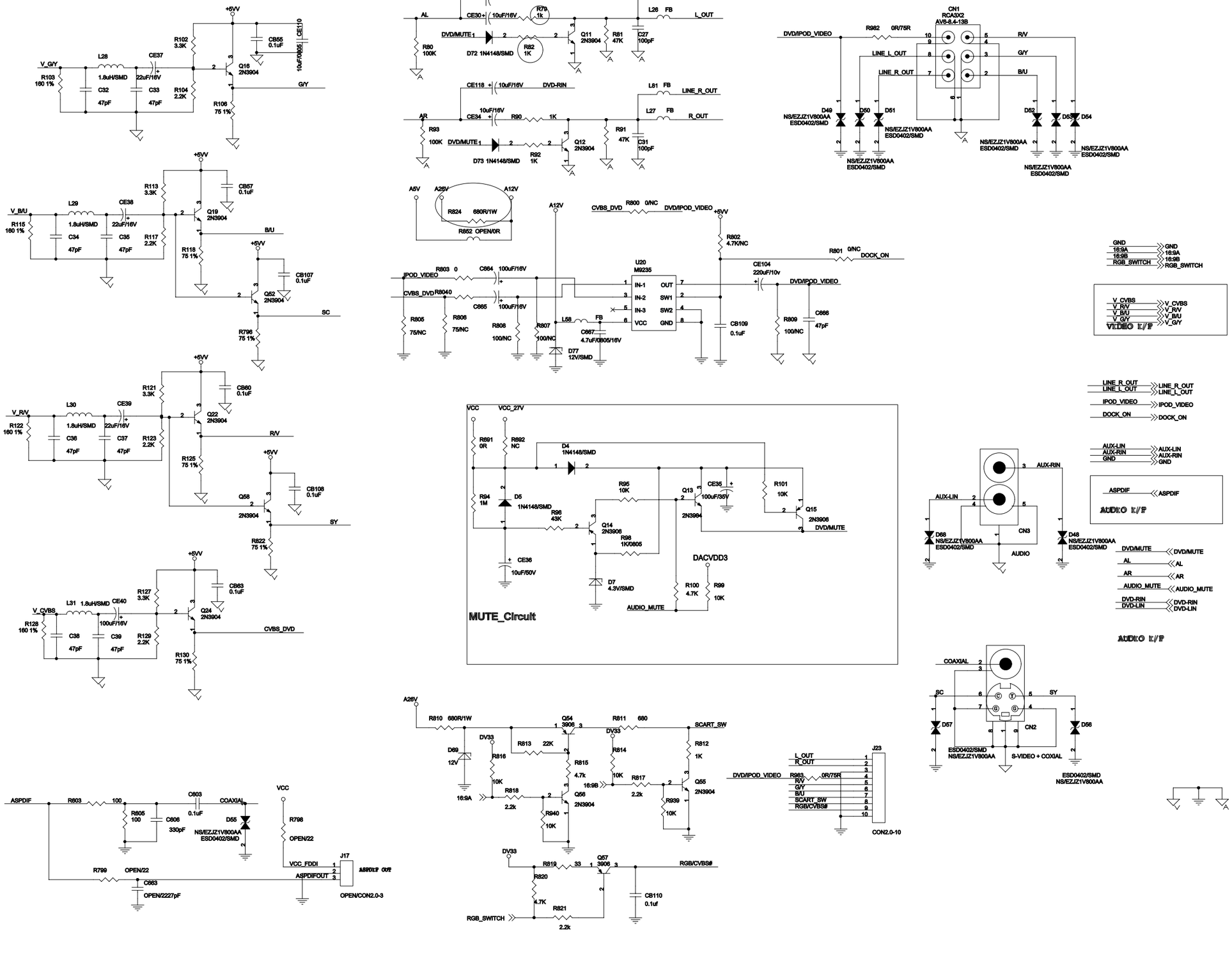

8-3

Decoder Board--Circuit Diagram-sheet3

SDRAM (Dual Layout)

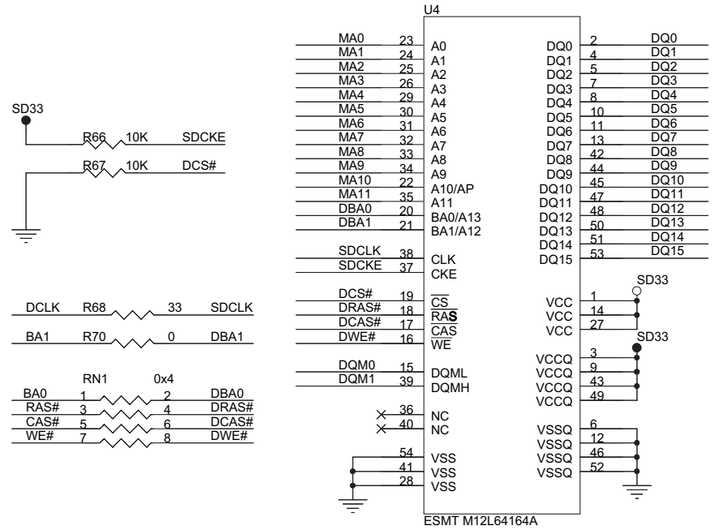

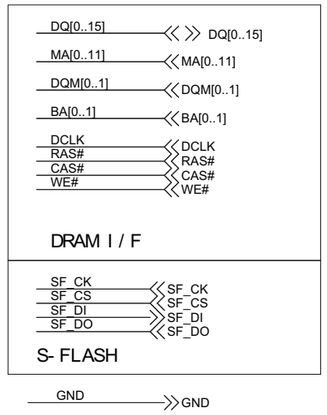

GND GND

S- FLASH

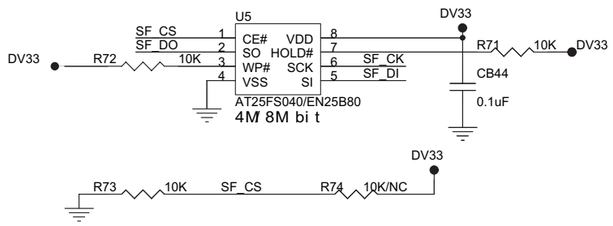

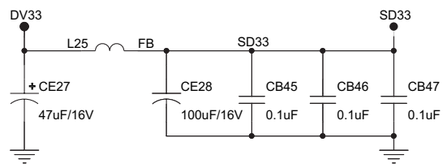

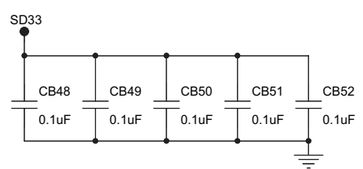

8-4

Decoder Board--Circuit Diagram-sheet4

EJS89L18-2CH

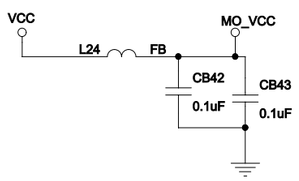

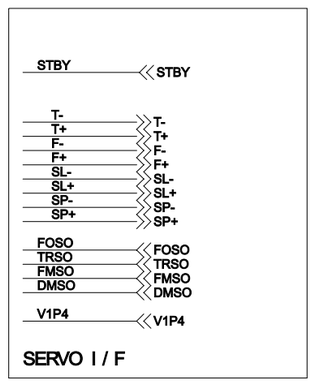

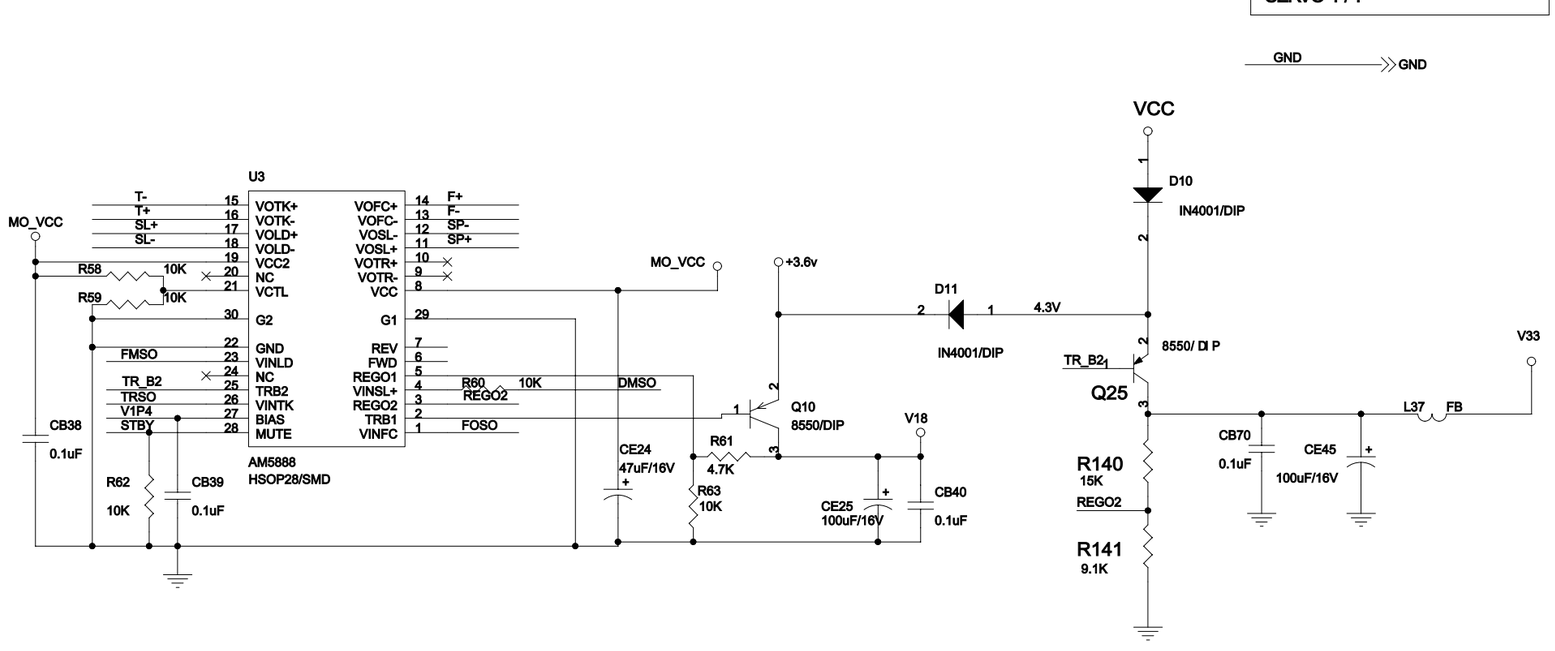

8-5

Decoder Board--Circuit Diagram-sheet5

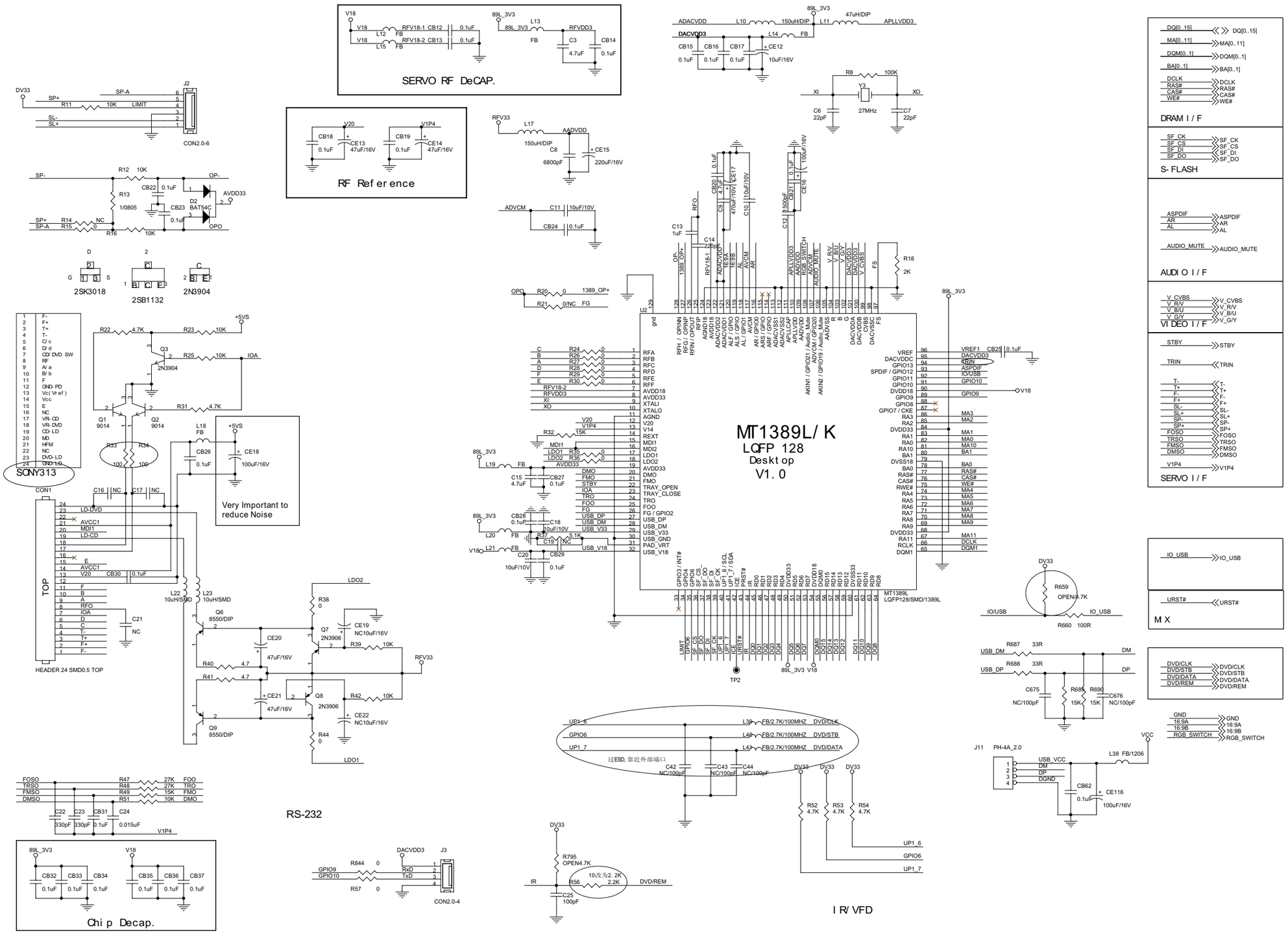

8-6

Decoder Board--Circuit Diagram-sheet6

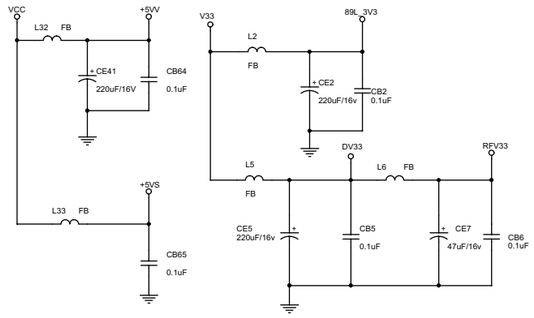

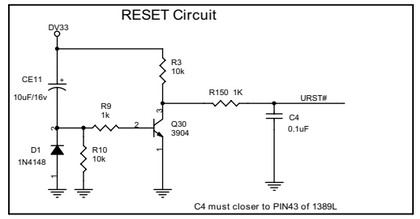

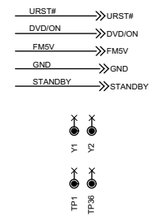

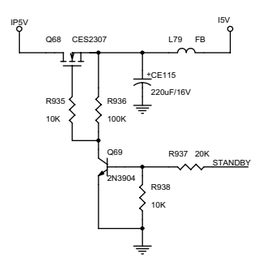

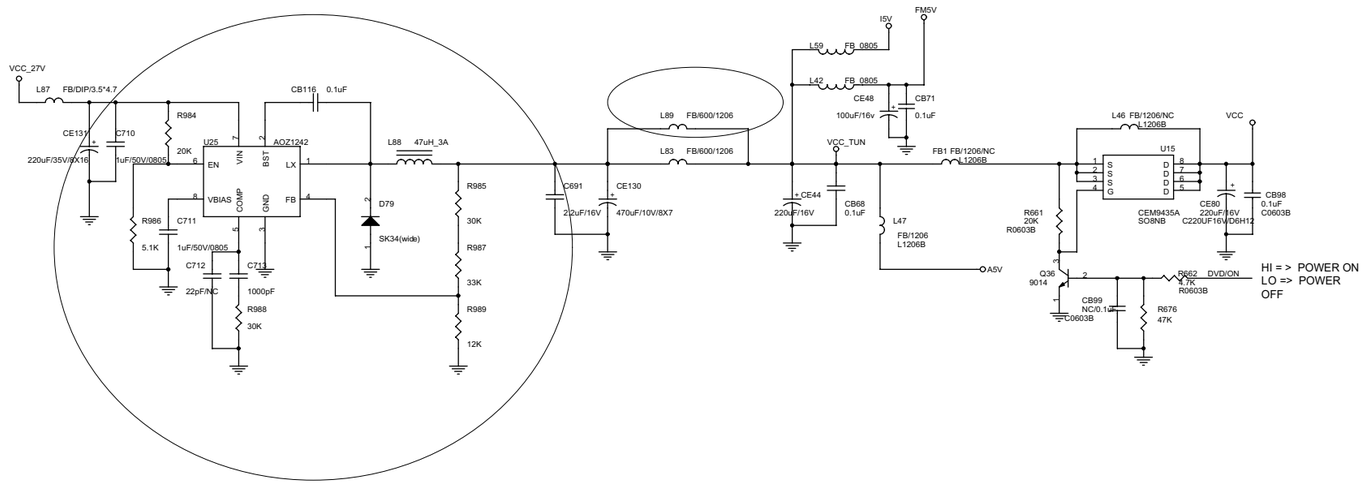

8-7

Decoder Board--Layout Diagram-Top

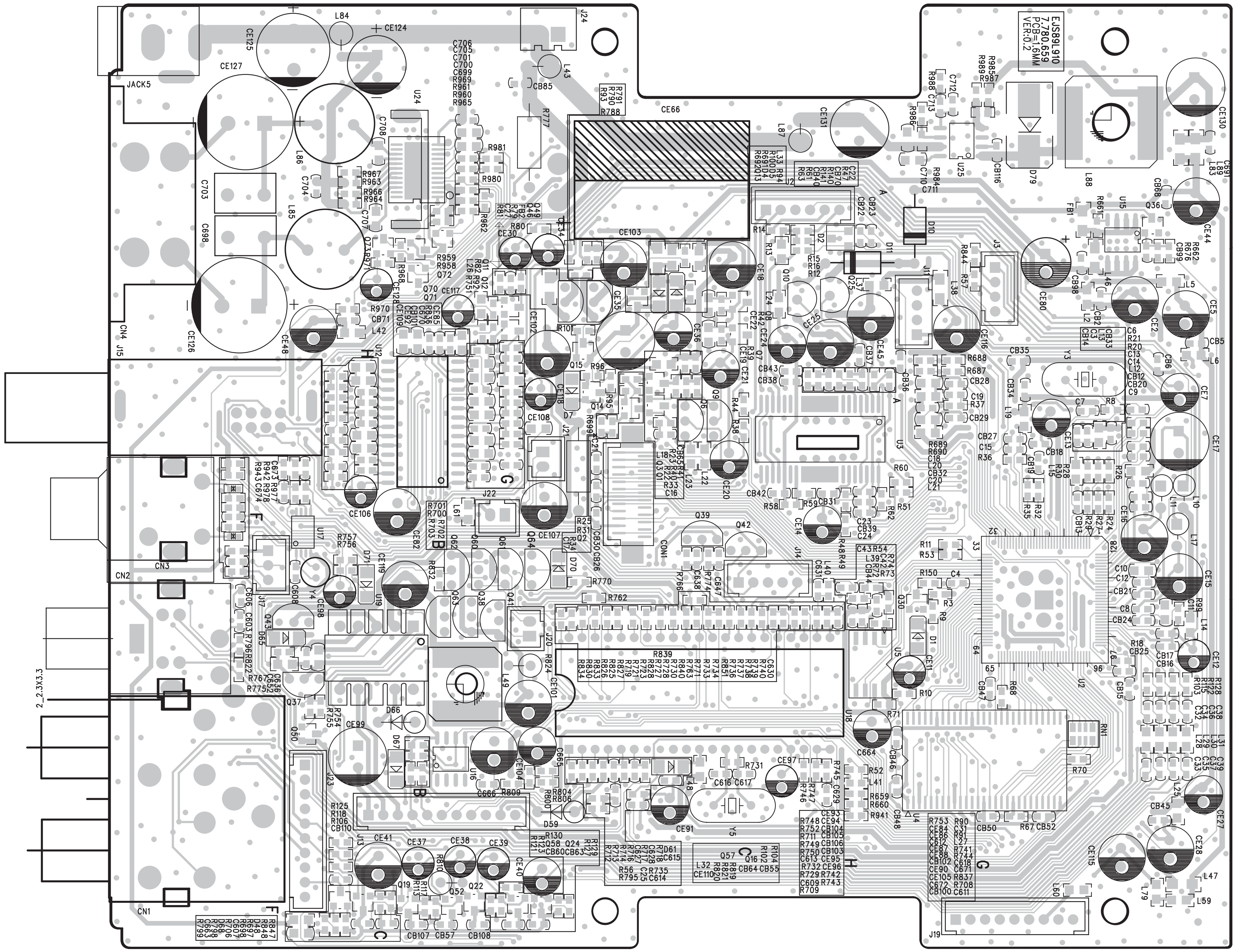

8-8

Decoder Board-Layout Diagram-Bottom

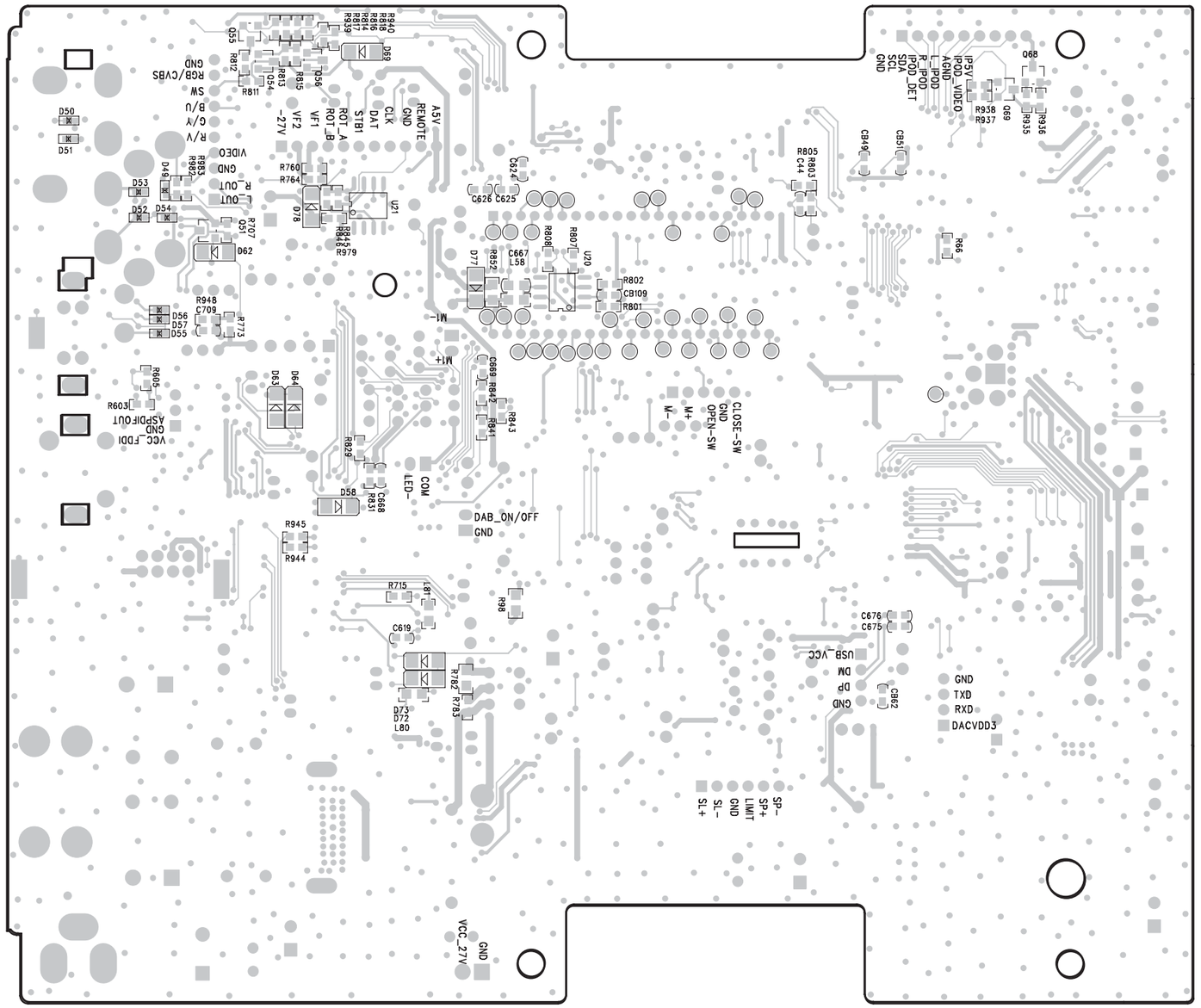

9-1

Explode View

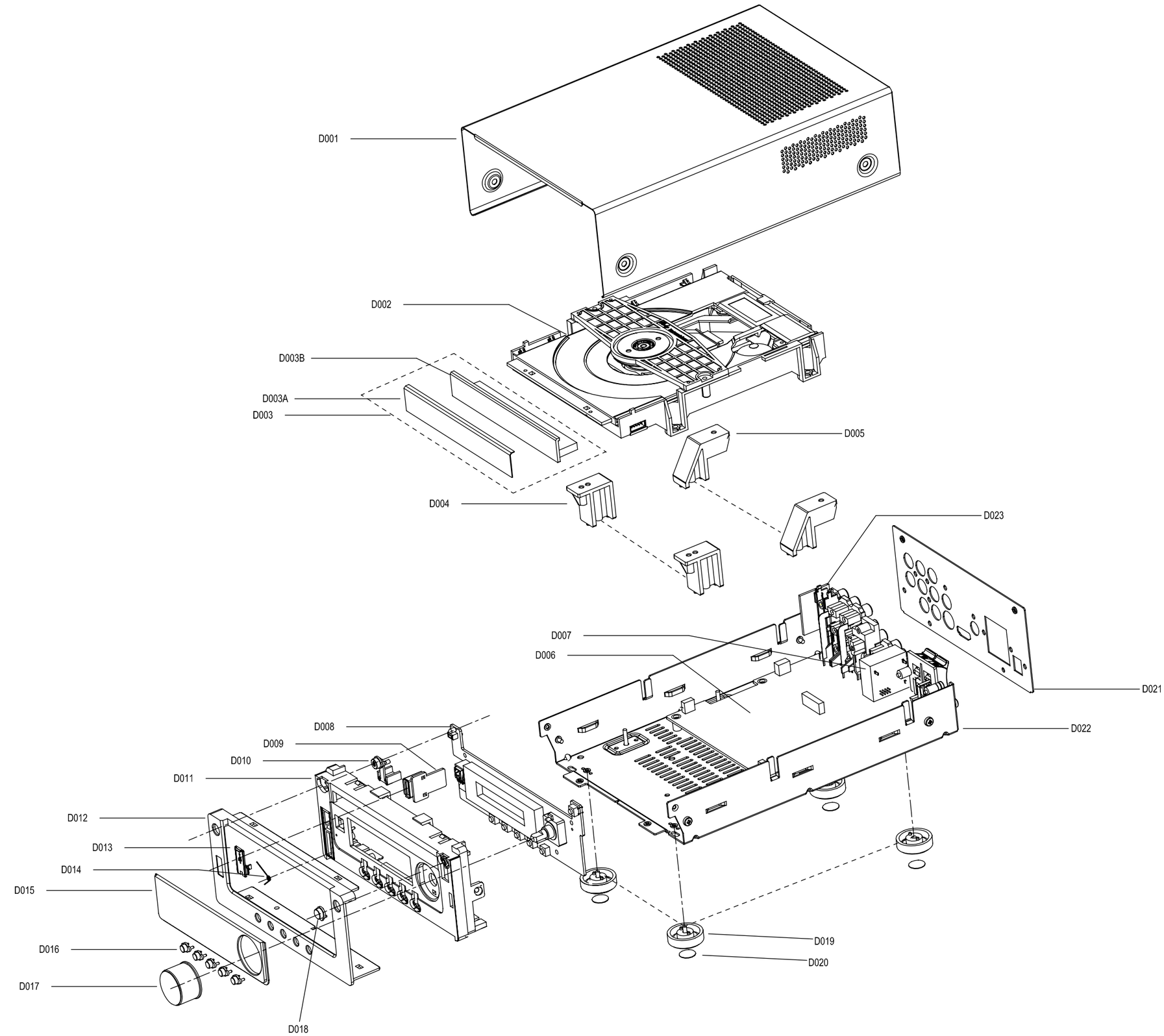

ACCESSORIES PARTS LIST

996510015782	SPEAKER BOX ASSY(L)
996510015789	SPEAKER BOX ASSY(R)
994000005078	AUDIO SINGLE WIRE W/RCA 1.5M
994000005166	AC LINE CORD 1.8M
996500041018	FM ANTENNA WIRE 1.5m
996520033992	GIFT BOX
996510015781	MAIN BRACKET ASSY 400X253X12
996510013528	REMOTE CONTROL ASSY
996510015780	AC SWITCHING ADAPTER 27V 2.5A

MECHNICAL&MISCELLANEOUS PARTS - DVD UNIT

D012	996510015774	DVD ALUMINUM PANEL
D013	996510015411	USB DOOR ABS SILVER
D015	996510015775	DVD DISPLAY LENS
D019	996510015779	PLASTIC FOOT
DVD1	996510004205	FLAT FLEX CBL 24PX250X0.5XA
D021	996510029271	SONY313AAD-T LOADER MECHANISM
D003	996510015409	DVD DOOR ASSY
D007	996510007819	TUNER BOARD PCB ASSY ECO6-05
D008	996510015769	DISPLAY BOARD ASSY
D008	996510015772	DECODER ASSY
D009	996510015770	USB BOARD ASSY
D010	996510015406	STANDBY BUTTON PARTS
D011	996510015773	DVD PLASTIC CABINET ASSY
D017	996510015414	VOLUME KNOB PARTS

Note: Only these parts mentioned in the list are normal service parts.